BOSCH GTM Model Integration

Karsten Einwich COSEDA Technologies GmbH
Jürgen Hanisch Robert Bosch GmbH



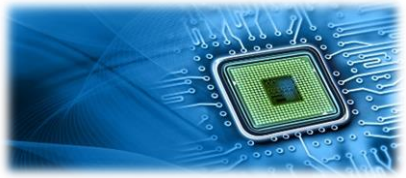

© COSEDA Technologies GmbH | COSIDE® - DESIGN ENVIROMENT FOR HETEROGENEOUS SYSTEMS

BOSCH GTM Virtual Prototype Integration

Outline

- BOSCH GTM IP
- BOSCH GTM SystemC virtual prototype
- COSIDE integration of BOSCH SystemC virtual prototype
- Programing of the BOSCH GTM within the virtual prototype
- Export to Simulink

GTM IP - Introduction

Motivation | Why GTM (Gen 1) ?

- GTM – Scalable I/O processor platform for …
  - … different application domains (designed for: powertrain, traction control, chassis control, xEV, industry, …)
  - … different classes within one application domain (e.g. 4 cyl. vs 8 cyl. engine)

- Common requirements:
  - Multiple capture/compare of external signals and combination with time stamps
  - Generation of complex output signal waveforms (e.g. PWM signals)
  - Provide common time base for system
  - Minimal CPU interaction / interrupt requests to reduce CPU load

- Application specific requirements:
  - Powertrain needs complex angle clock mechanism
  - Transmission control needs BLDC support

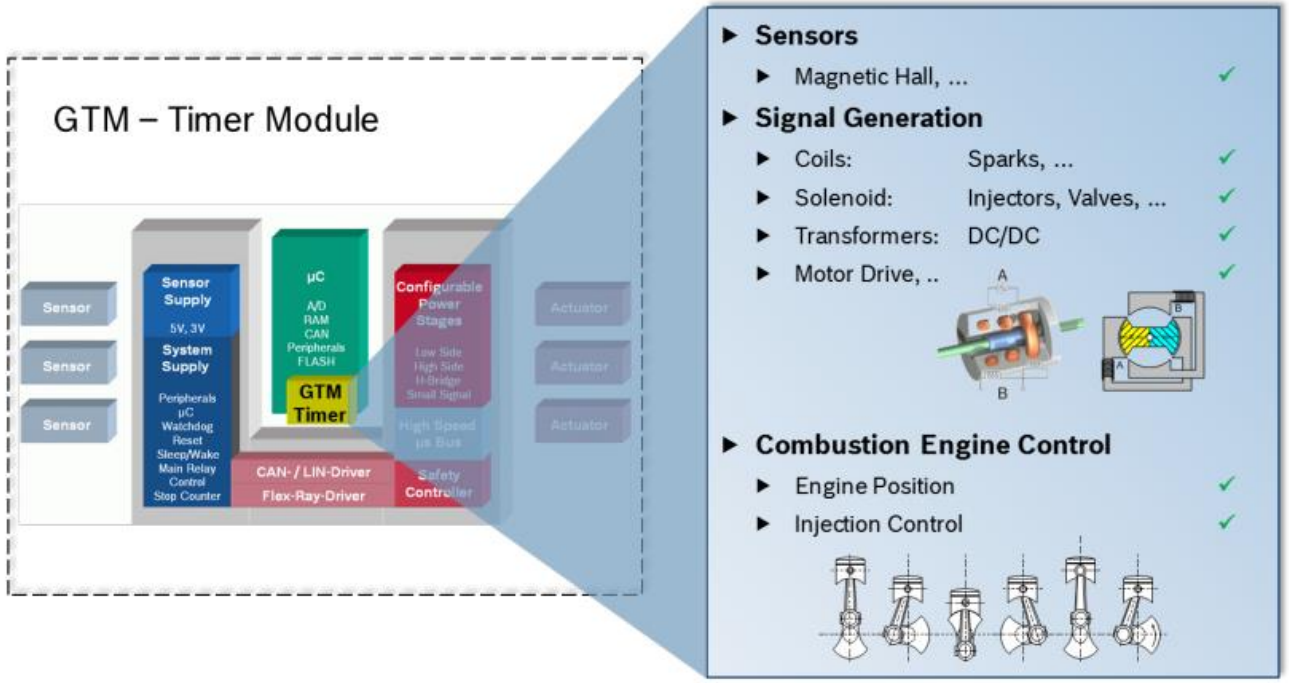

Automotive Electronics | AE/EID | 9/6/2017
© Robert Bosch GmbH 2017. All rights reserved, also regarding any disposal, exploitation, reproduction, editing, distribution, as well as in the event of applications for industrial property rights.

BOSCH

COSEDA technologies

Confidential

GTM IP - Introduction
Legal framework

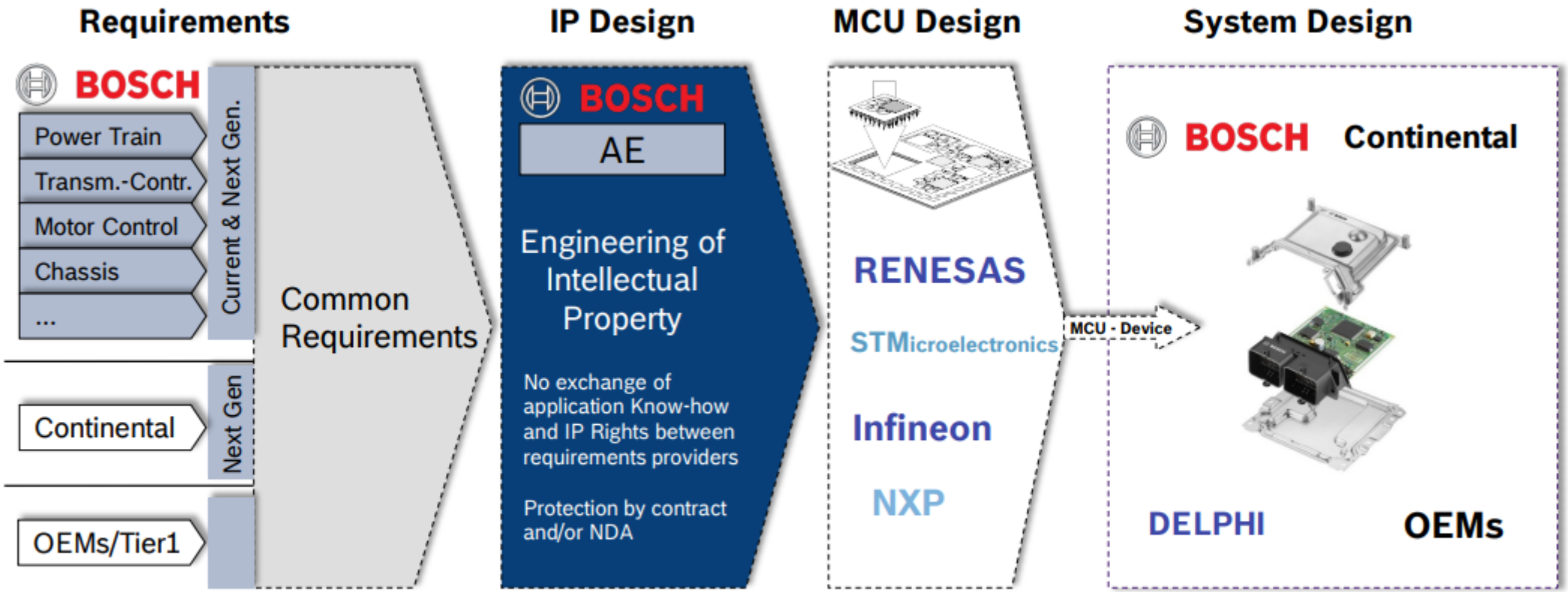

Bosch AE distributes right of the requirements provider to S/C suppliers

Automotive Electronics | AE/EID | 9/6/2017
© Robert Bosch GmbH 2017. All rights reserved, also regarding any disposal, exploitation, reproduction, editing, distribution, as well as in the event of applications for industrial property rights.

BOSCH

COSEDA technologies

Confidential

GTM – Much more than a timer
Support supply chain risk mitigation

Service layer with Mem-Stack, Com-Stack and Security covered by SW

Covered by Tier2 SW

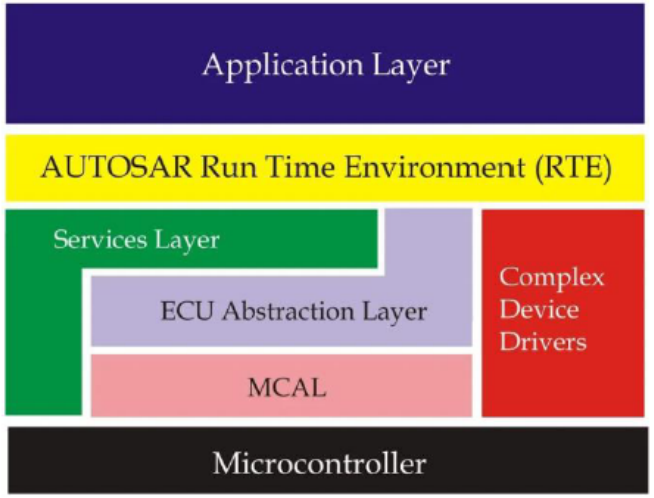

Covered by GTM VHDL IP

Advantage:
- Time dependent functionality completely covered in GTM – TIM, TOM, ARU, MCS
- Not real time part of SW driver in C-Code run on main µC Core outside GTM – low effort compilation for different cores
- Result: Same complex driver running with same real time behavior on µController from different vendors
- Service layer with Mem-Stack, Com-Stack and Security covered by SW

Reduce effort in embedded control projects to support µController multi-supplier strategy

Internal | PS-EC/EHM | 2022-09-14
289_214
© Robert Bosch GmbH 2022. All rights reserved, also regarding any disposal, exploitation, reproduction, editing, distribution, as well as in the event of applications for industrial property rights.

BOSCH

COSEDA technologies

Confidential

GTM IP - Introduction
Concept & Architecture | ... a scalable I/O processor for automotive and industry µCs

- Programmability by external CPU(s)
- Hardware sub-modules to implement common timer functionality
- Internal core(s) with RISC-like instruction set (MCS)
- Dedicated sub-modules for special functions of different application domains, e.g.:
  - Engine positioning (DPLL)
  - Sensor Evaluation (SPE)
  - Support of safety functions (CMP, MON)
- Central routing unit connects sub-modules and I/O ports in flexible manner
- Optional µC bus master capability to enable workload offloading from µC cores

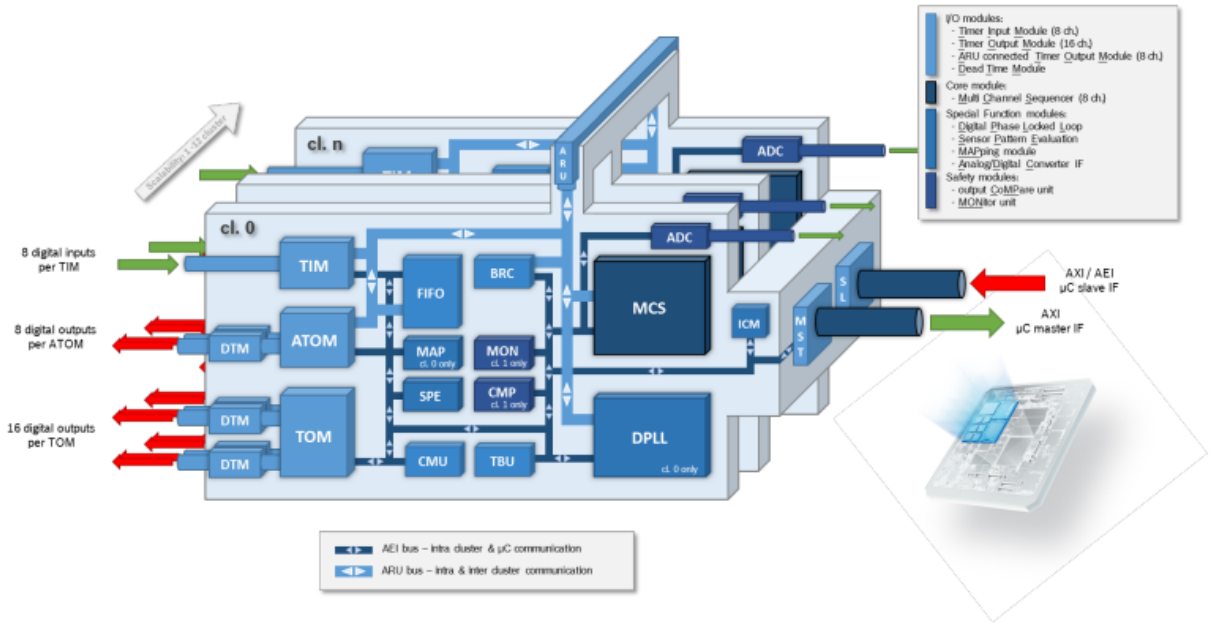

© Robert Bosch GmbH 2017. All rights reserved, also regarding any disposal, exploitation, reproduction, editing, distribution, as well as in the event of applications for industrial property rights.

BOSCH

COSEDA technologies

Confidential

BOSCH GTM Virtual Prototype Integration

SystemC Model

- BOSCH provides a SystemC model for the GTM IP
  - Low Cost virtual GTM prototype
  - Platform to provide applications and user examples independent of available/planned Microcontrollers of different companies
- BOSCH GTM model is integrated in COSIDE
- COSEDA Tools permit the export of the model to:
  - Matlab / Simulink
  - Cadence Incisive
  - Siemens EDA Questa
  - …

BOSCH GTM Virtual Prototype Integration

COSIDE Integration

- BOSCH GTM Model implements maximal configuration
- Not used parts have no performance impact
- Ports of channels represented by vectors
- Model can be configured graphically using the schematic editor

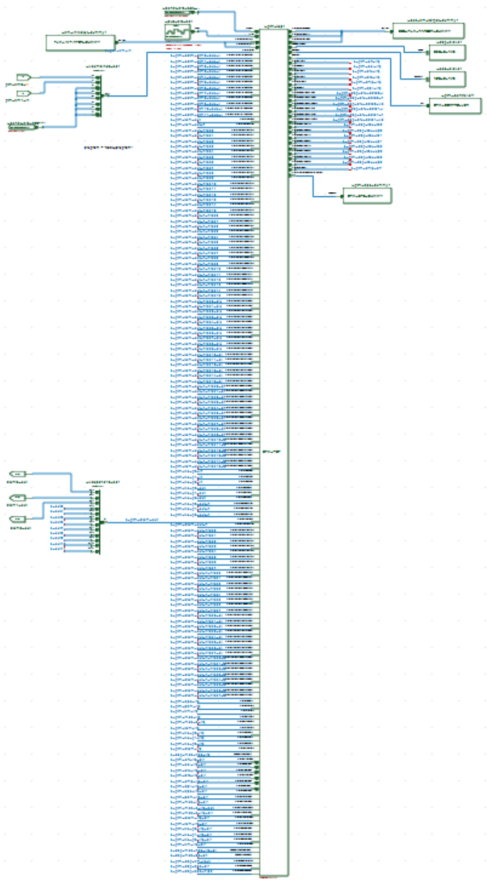

BOSCH GTM Virtual Prototype Integration

Principle Programing BOSCH GTM Virtual Prototype

- The model provides a TLM interface
- C-functions provided to send commands via this interface (HAL)
- TLM interface can be also connected with a micro controller model
  - Controller independent and dependent simulation possible
- Some backdoor functionality for debugging

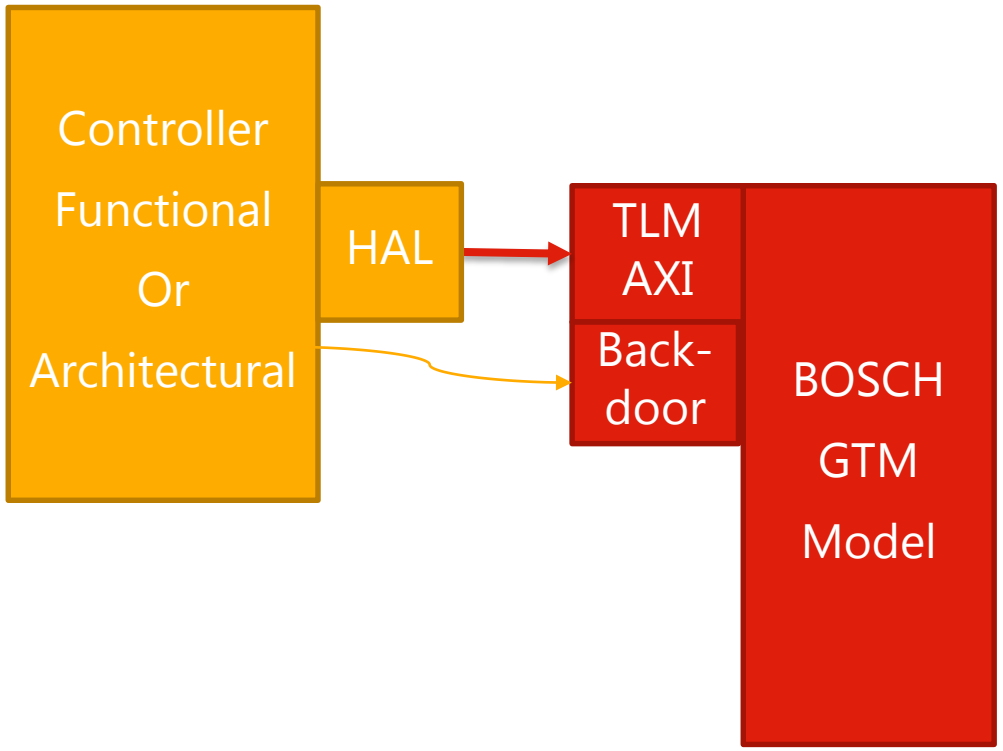

BOSCH GTM Virtual Prototype Integration

Example functional controller program using HAL

```
void coseda_test1_program()
{
  gtm_uint32 aei_status=0;
  gtm_aei_wait_ns(100);
  std::uint32_t data=0;
  module_report::set_report_level("bus","DBG1");

  data=gtm_aei_read(CCM0_HW_CONF2,&aei_status);
  gtm_aei_wait_ns(100);

  gtm_aei_write(CCM0_HW_CONF2,0x2,&aei_status);
  gtm_aei_wait_ns(200);

   …
```

```
GAL_INFO("Loading program to MCS RAM ...");
for (i= 0; i < SIZE_G_COSEDA_TEST2_MCS_MEM/4; i++)
{
  if (g_coseda_test2_mcs_mem[i] !=0 )
  {
    GTM_CLSIM(MCS_MEM,0,i+offset)=mcs_mem[i];
  }
}


  // run MCS channel
 GTM_CLSI(MCS,0,CH[0].CTRL) = 0x1;

  // wait until MCS program started
  while (GTM_CLSI(MCS,0,CH[0].PC) == 0x0);

  // wait until MCS program finished
  while (GTM_CLSI(MCS,0,CH[0].CTRL) & 0x1);
```

BOSCH GTM Virtual Prototype Integration

COSIDE Integration

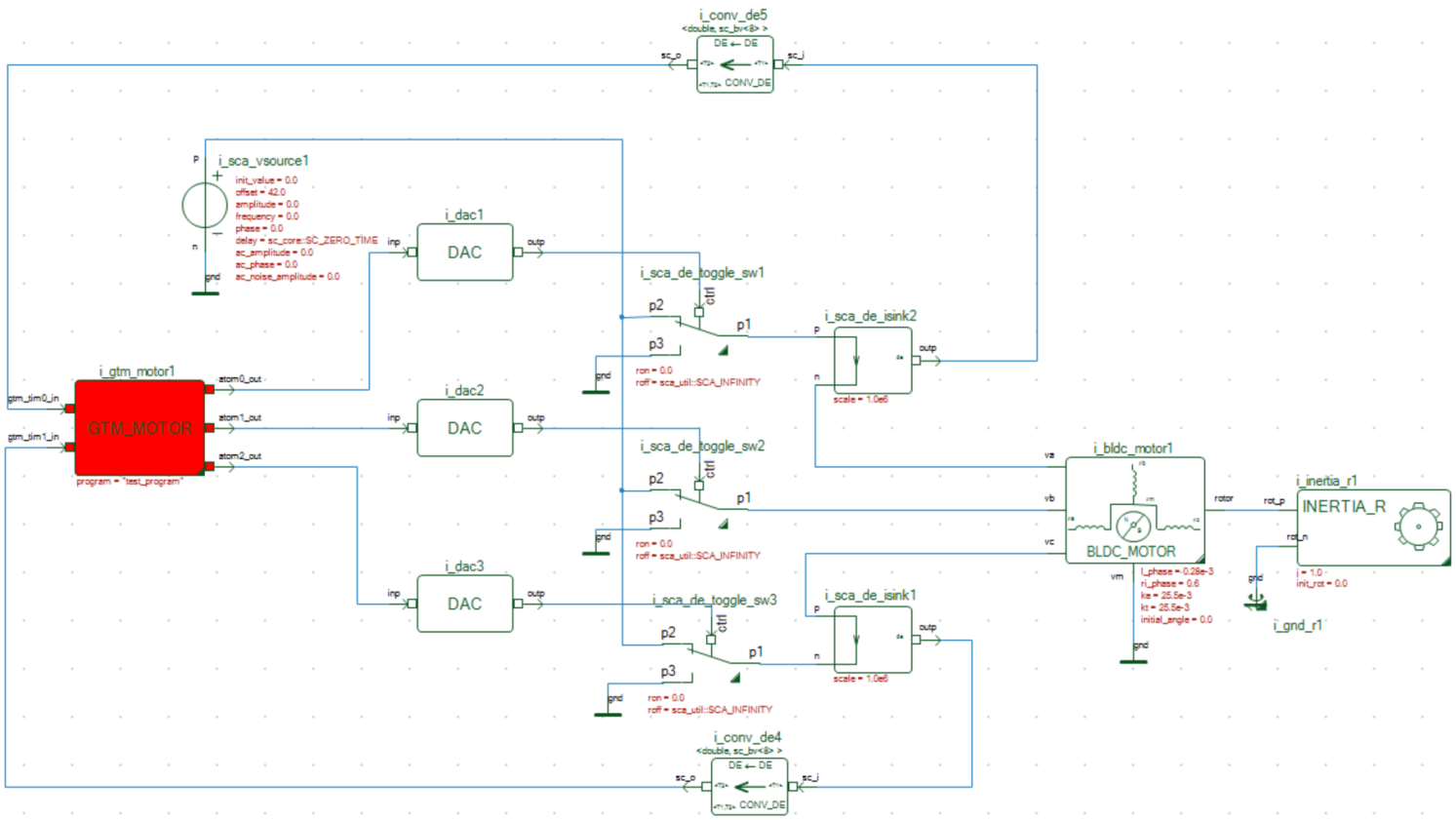

BOSCH GTM Virtual Prototype Integration

Principal GTM Model Export

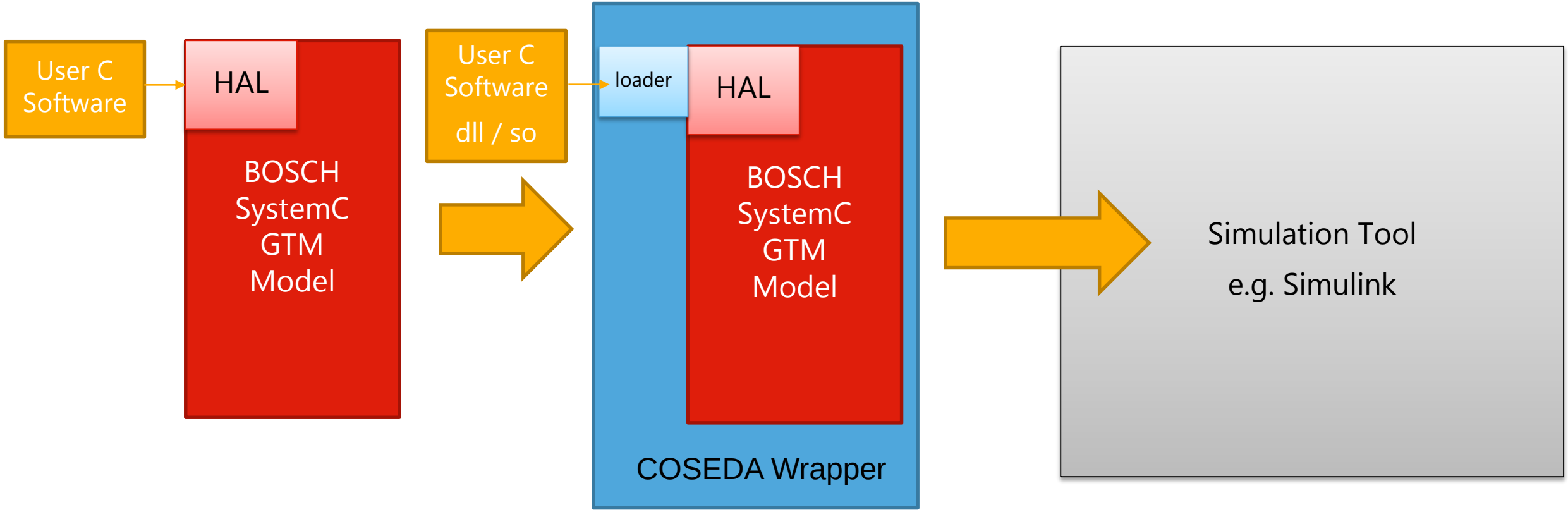

BOSCH GTM Virtual Prototype Integration

Export GTM Model to Simulink

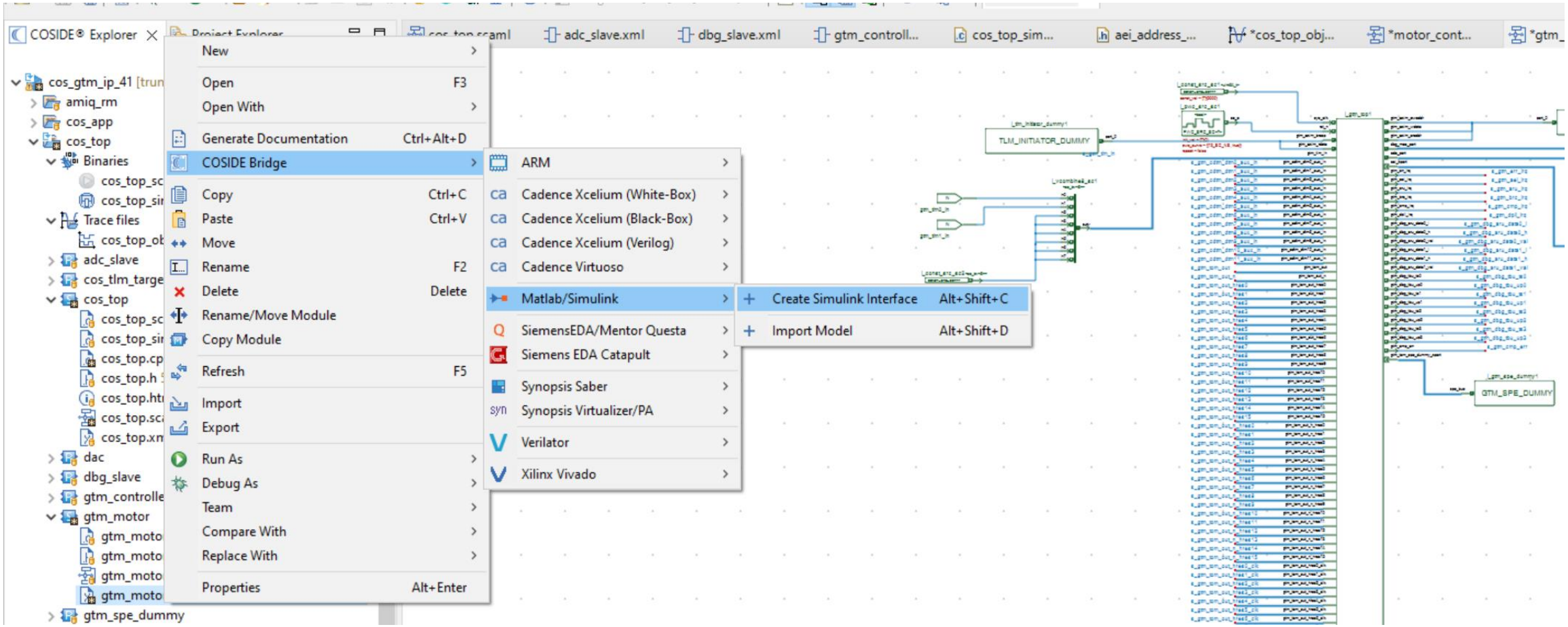

BOSCH GTM Virtual Prototype Integration

Simulink export example – BLDC Motor Control

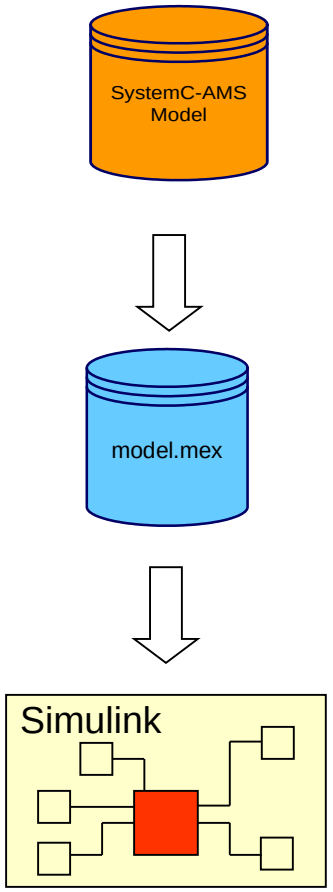

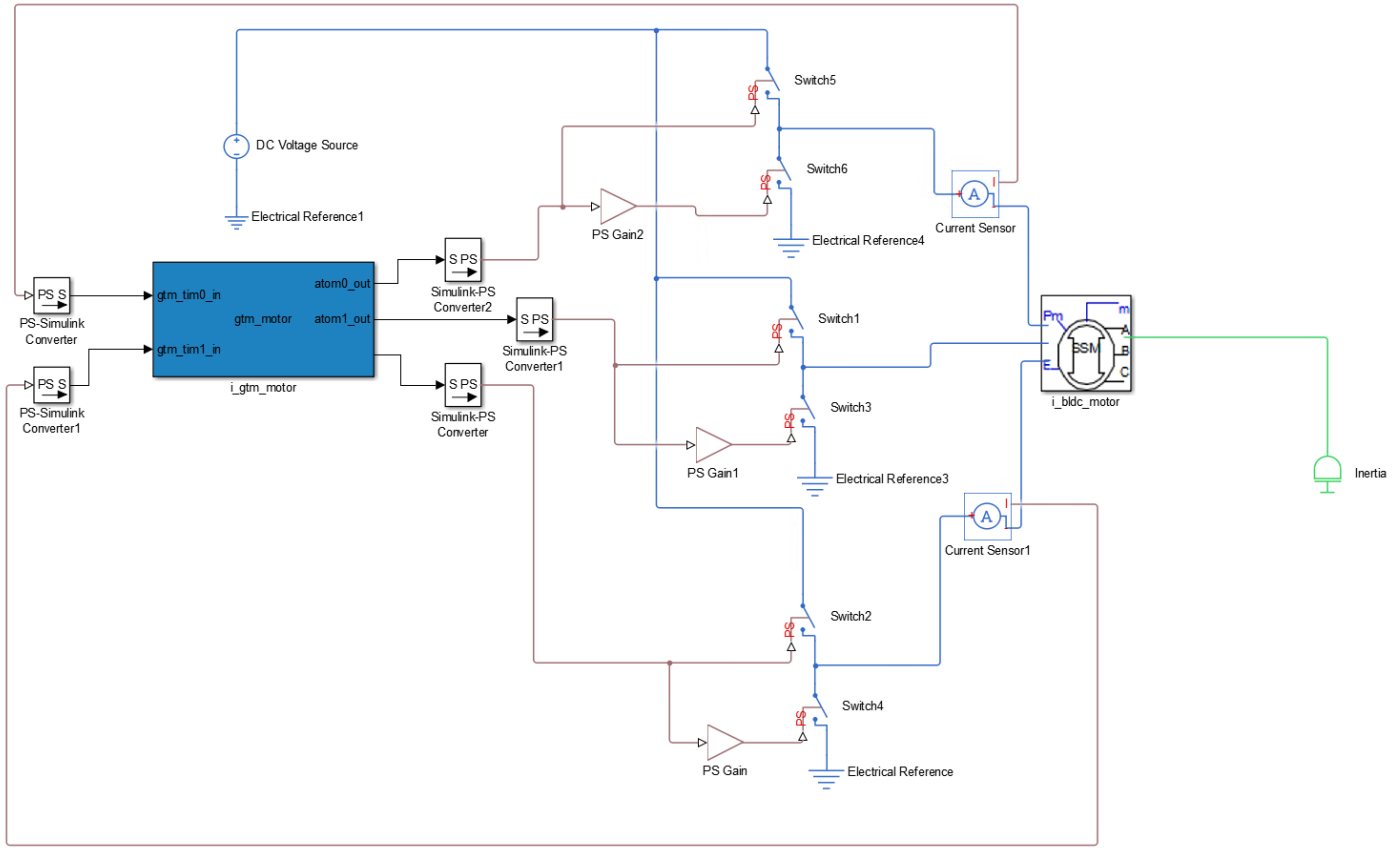

BOSCH GTM Virtual Prototype Integration

GTM Simulink Model

- Simulink models for a default GTM configurations will be provided
- Customized configurations can be provided on request
- COSIDE user can configure/change the GTM and export it to Simulink themselves

- COSEDA will provide a download link for a Simulink model with an often used configuration
- Other configurations can be requested via BOSCH